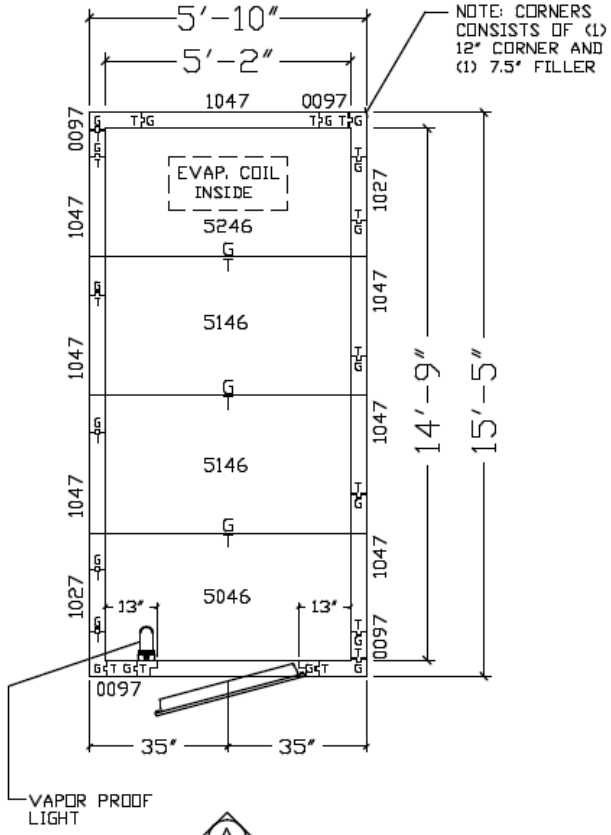

COOLER or FREEZER

115/60/1, 1.0 AMPS FOR LIGHT ONLY
115/60/1, 2.2 AMPS FOR LIGHT & HEAT WIRE
ADDITIONAL AMP DRAWS FOR REFRIGERATION

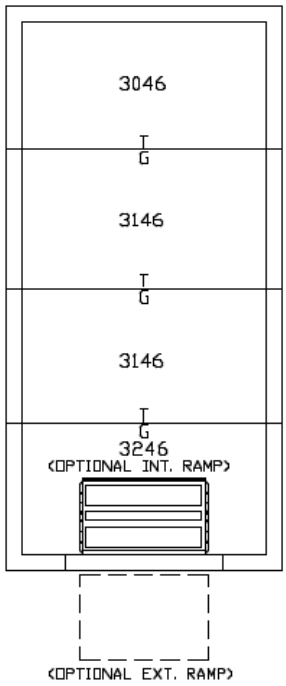

FLOOR OPTIONS:

NSF LISTED

c UL us LISTED

DOOR SHOWN HINGED RIGHT. CUSTOMER TO CONFIRM R.H. OR L.H. HINGE... EXCEPT FOR INTERIOR RAMP APPLICATIONS, THE DOOR LOCATION CAN BE MOVED TO ANY PANELS MARKED #1047.

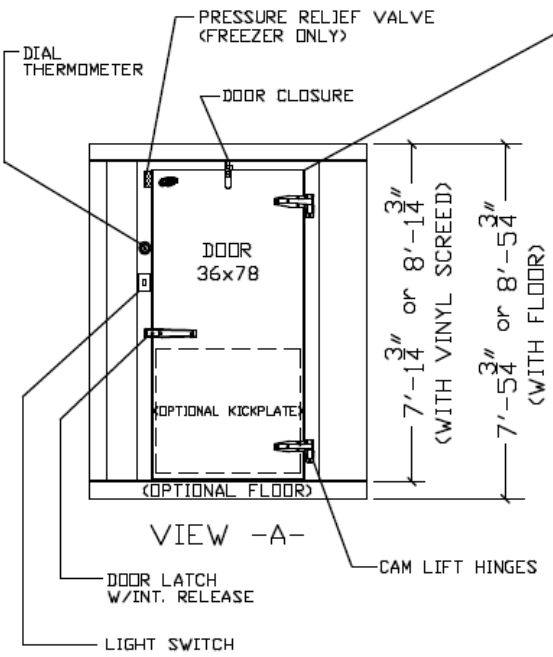

VIEW -A-

ASTM E-84 APPROVED

WARNING

ENGINEERED FOR ON-GRADE INSTALLATION. IF ANY PORTION OF THIS WALK-IN IS TO BE INSTALLED IN A DEPRESSION, *CONTACT LEER WALK-IN SALES DEPARTMENT IMMEDIATELY 1-800-766-5337.

DATE	4-16-04
SCALE	N.T.S.
DWN BY	DWS
CHK'D BY	DWS

LEER WALK-IN DIVISION
NEW LISBON, WI.
PH. # 1-800-766-5337
FAX # 1-608-562-3166

5'-10" X 15'-5" (G-24)
COOLER or FREEZER

DRAWING # STK616